DotNetNuke 05.04.02 Community Edition
Entity Relationship Diagram

User Authentication and Authorization

Content

Support Tables

System Tables/Configuration
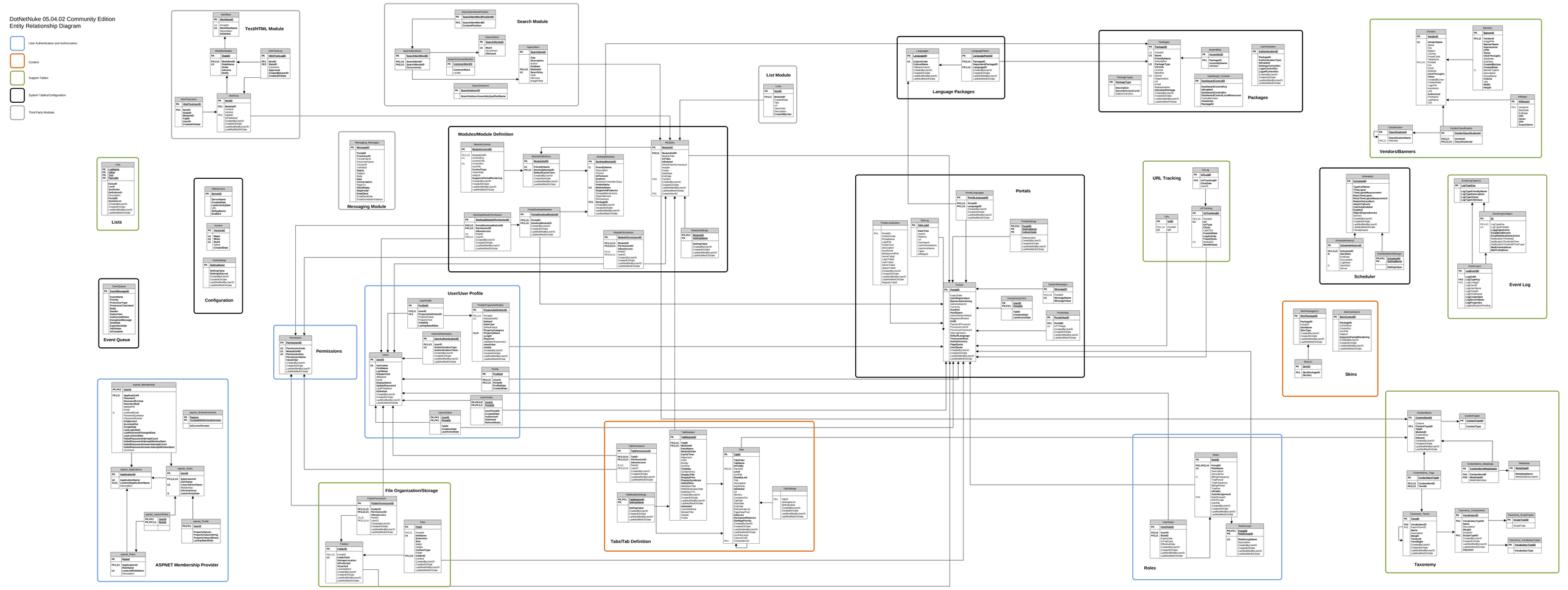
Third Party Modules